The AKRON (Montgomery Ward) Model 134G Instant Glo design.

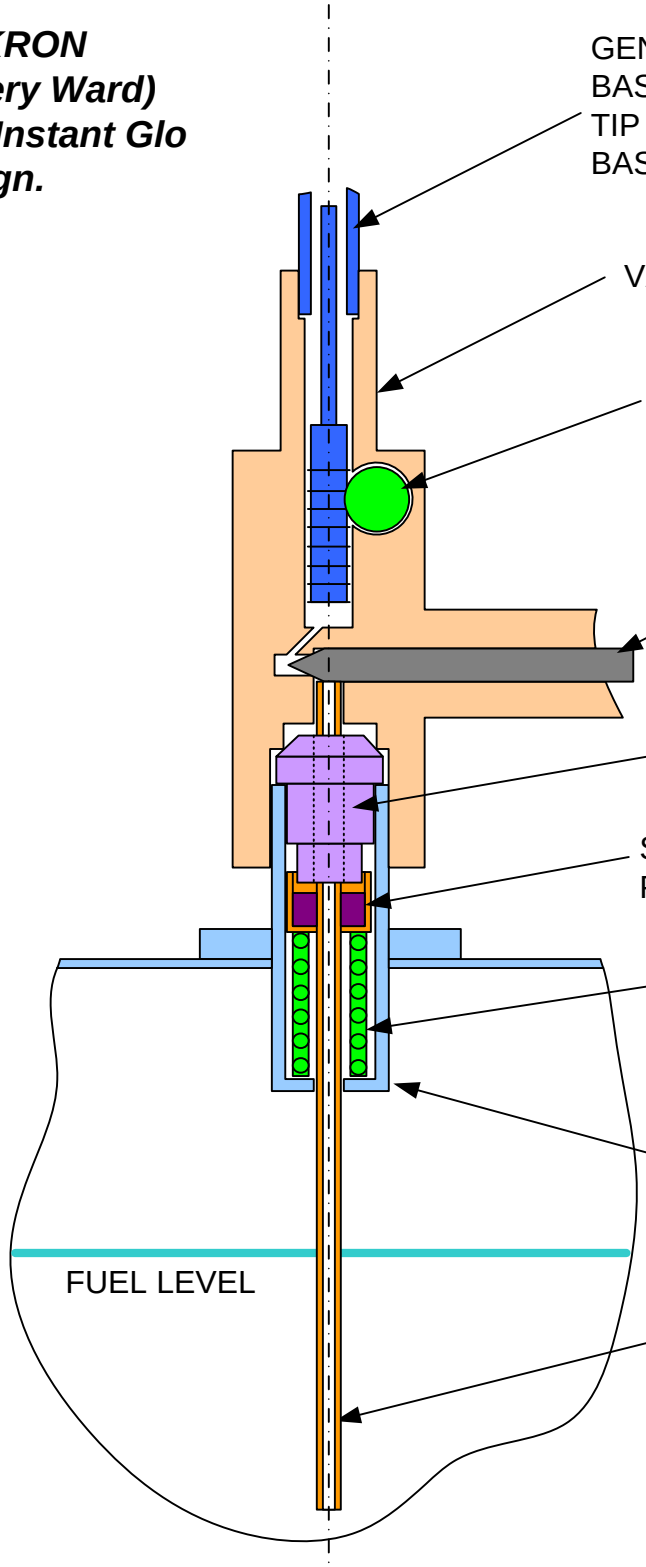

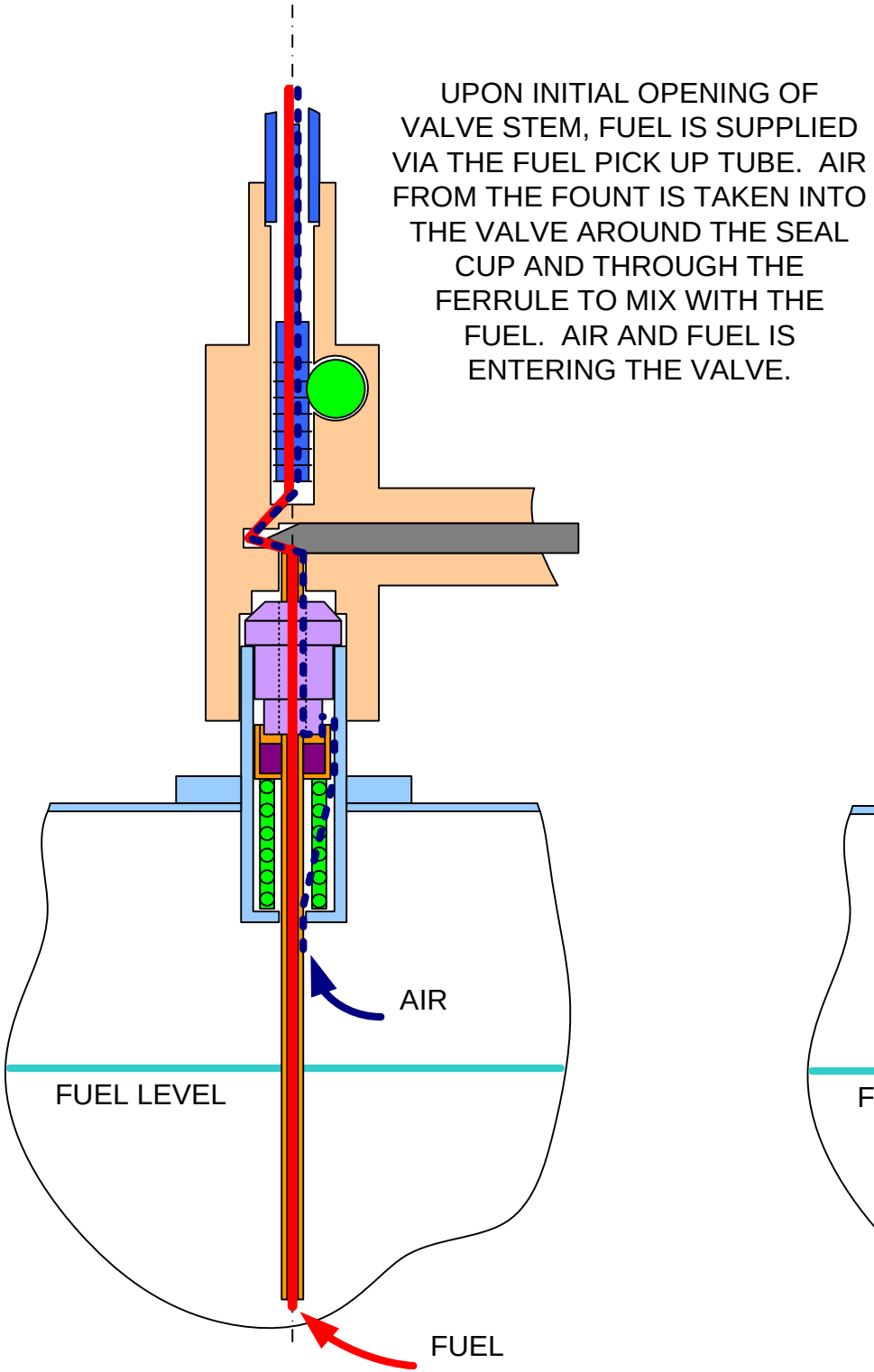
UPON INITIAL OPENING OF VALVE STEM, FUEL IS SUPPLIED VIA THE FUEL PICK UP TUBE. AIR FROM THE FOUNT IS TAKEN INTO THE VALVE AROUND THE SEAL CUP AND THROUGH THE FERRULE TO MIX WITH THE FUEL. AIR AND FUEL IS ENTERING THE VALVE.
AIR
FUEL LEVEL
FUEL

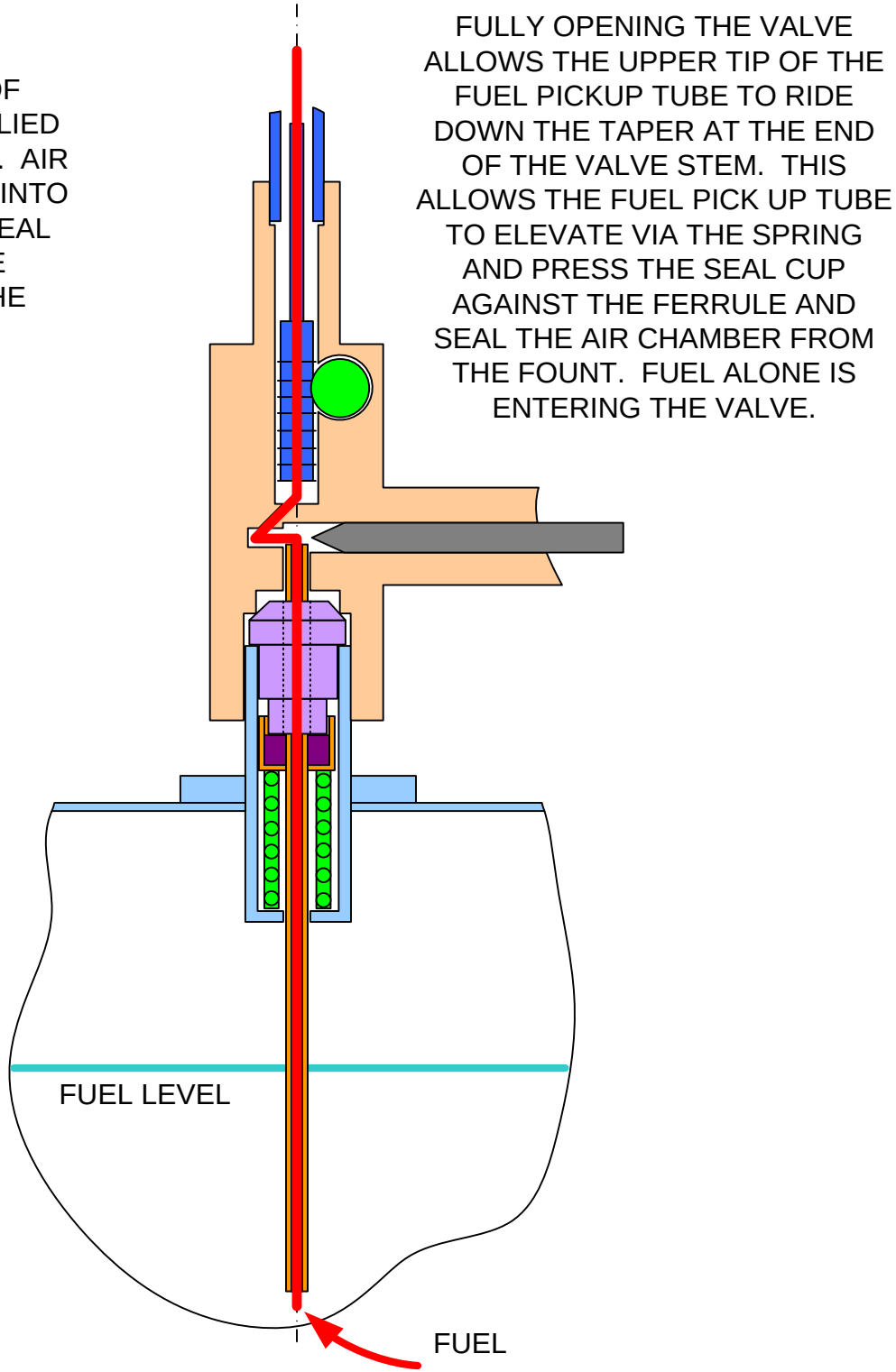
FULLY OPENING THE VALVE ALLOWS THE UPPER TIP OF THE FUEL PICKUP TUBE TO RIDE DOWN THE TAPER AT THE END OF THE VALVE STEM. THIS ALLOWS THE FUEL PICK UP TUBE TO ELEVATE VIA THE SPRING AND PRESS THE SEAL CUP AGAINST THE FERRULE AND SEAL THE AIR CHAMBER FROM THE FOUNT. FUEL ALONE IS ENTERING THE VALVE.
FUEL LEVEL
FUEL